5A	MODEL	ALL MODELS
POWER TRAIN CONTROL MODULE (V6)		

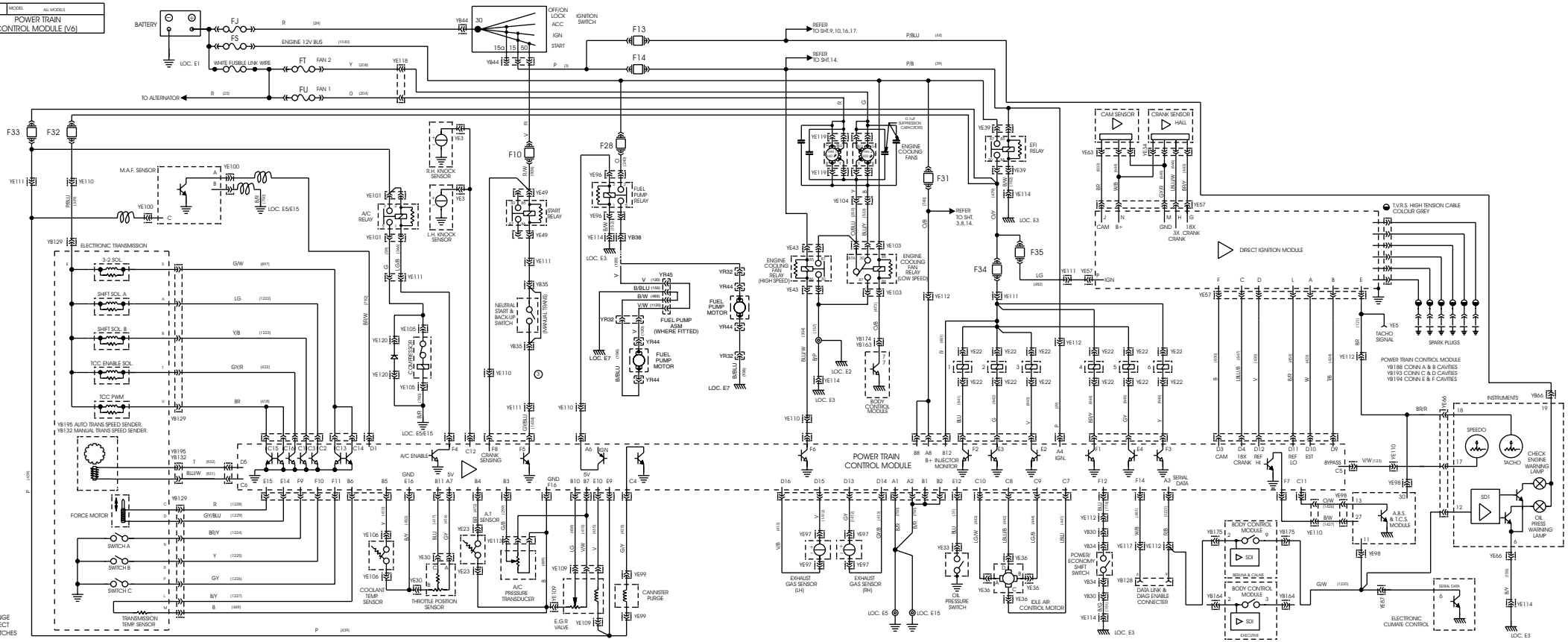

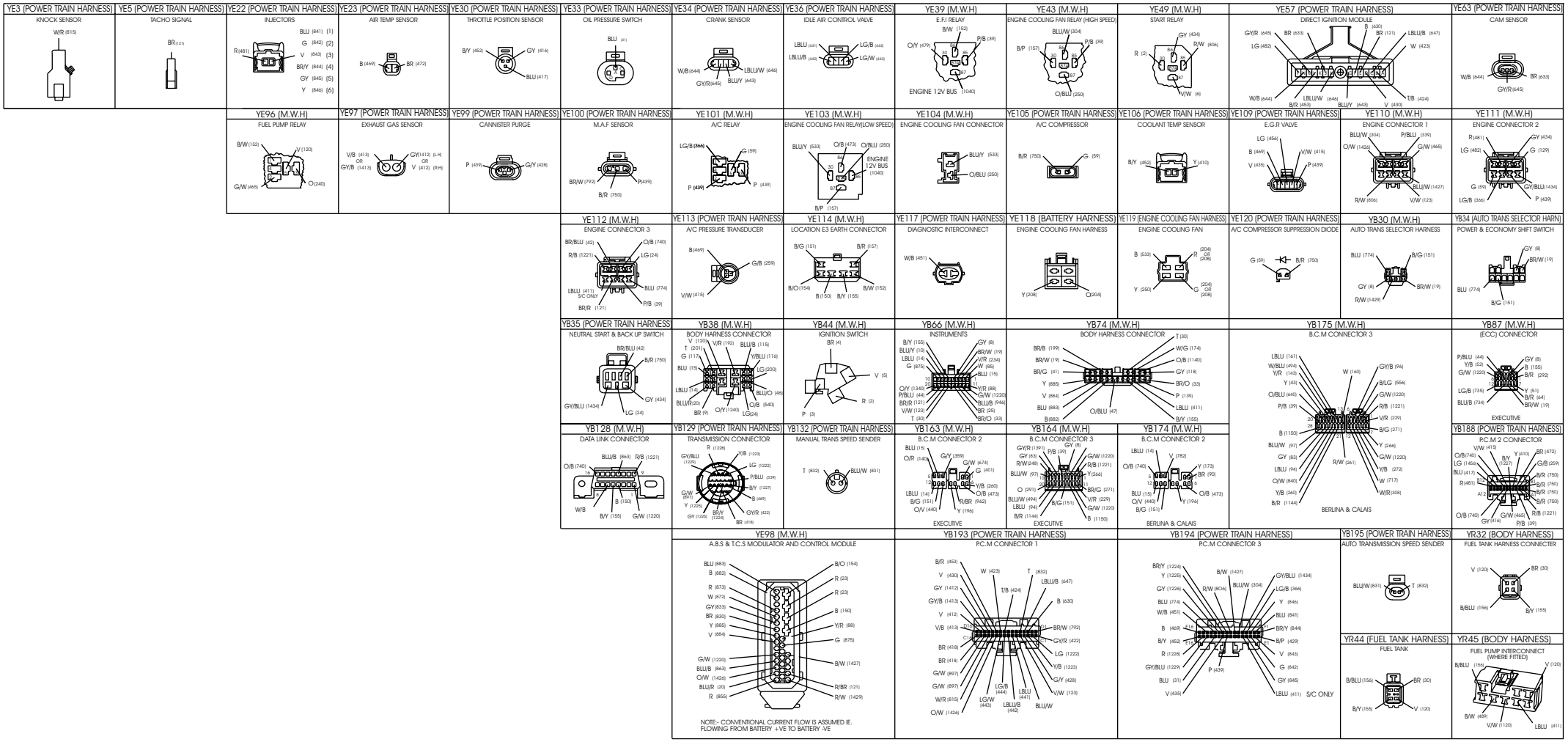
YE3 (POWER TRAIN HARNESS)
KNOCK SENSOR
W/R (815)
YE5 (POWER TRAIN HARNESS)
TACHO SIGNAL
BR (121)
YE22 (POWER TRAIN HARNESS)
INJECTORS
R (481)
BLU (841) (1)
G (842) (2)
V (843) (3)
BR/Y (844) (4)
GY (845) (5)
Y (846) (6)
YE23 (POWER TRAIN HARNESS)
AIR TEMP SENSOR
B (469)
BR (472)
YE30 (POWER TRAIN HARNESS)
THROTTLE POSITION SENSOR
B/Y (452)
GY (416)
BLU (417)
YE33 (POWER TRAIN HARNESS)
OIL PRESSURE SWITCH
BLU (91)
YE34 (POWER TRAIN HARNESS)
CRANK SENSOR
W/B (644)
LBLU/W (646)
GY/R (645)
BLU/Y (643)
YE36 (POWER TRAIN HARNESS)
IDLE AIR CONTROL VALVE
LBLU (441)
LBLU/B (442)
LG/B (444)
LG/W (443)
YE39 (M.W.H)
E.F.I RELAY
B/W (152)
O/Y (470)
P/B (39)
ENGINE 12V BUS (1040)
YE43 (M.W.H)
ENGINE COOLING FAN RELAY (HIGH SPEED)
BLU/W (304)
B/P (157)
P/B (39)
O/BLU (250)
YE49 (M.W.H)
START RELAY
GY (434)
R (2)
R/W (806)
V/W (6)
YE57 (POWER TRAIN HARNESS)
DIRECT IGNITION MODULE
B (630)
GY/R (645)
BR (633)
BR (121)
LBLU/B (647)
LG (482)
W (423)
W/B (644)
LBLU/W (646)
BLU/Y (643)
V (430)
T/B (424)
B/R (453)
YE63 (POWER TRAIN HARNESS)
CAM SENSOR
W/B (644)
BR (633)
GY/R (645)
YE96 (M.W.H)
FUEL PUMP RELAY
B/W (152)
V (120)
G/W (465)
O (240)
YE97 (POWER TRAIN HARNESS)
EXHAUST GAS SENSOR
V/B (413) OR GY/B (1413)
GY(1412) (L.H) OR V (412) (R.H)
YE99 (POWER TRAIN HARNESS)
CANNISTER PURGE
P (439)
G/Y (428)
YE100 (POWER TRAIN HARNESS)
M.A.F SENSOR
BR/W (792)
P(439)
B/R (750)
YE101 (M.W.H)
A/C RELAY
LG/B (366)
G (59)
P (439)
YE103 (M.W.H)
ENGINE COOLING FAN RELAY(LOW SPEED)
BLU/Y (533)
O/B (473)
O/BLU (250)
ENGINE 12V BUS (1040)
B/P (157)
YE104 (M.W.H)
ENGINE COOLING FAN CONNECTOR
BLU/Y (533)
O/BLU (250)
YE105 (POWER TRAIN HARNESS)
A/C COMPRESSOR
B/R (750)
G (59)
YE106 (POWER TRAIN HARNESS)
COOLANT TEMP SENSOR
B/Y (452)
Y (410)
YE109 (POWER TRAIN HARNESS)
E.G.R VALVE
LG (456)
B (469)
V/W (415)
V (435)
P (439)
YE110 (M.W.H)
ENGINE CONNECTOR 1
BLU/W (304)
P/BLU (339)
O/W (1426)
G/W (465)
BLU/W (1427)
R/W (806)
V/W (123)
YE111 (M.W.H)
ENGINE CONNECTOR 2
R (481)
GY (434)
LG (482)
G (129)
G (59)
GY/BLU(1434)
LG/B (366)
P (439)
YE112 (M.W.H)
ENGINE CONNECTOR 3
BR/BLU (42)
O/B (740)
R/B (1221)
LG (24)
LBLU (411) S/C ONLY
BLU (774)
P/B (39)
BR/R (121)
YE113 (POWER TRAIN HARNESS)
A/C PRESSURE TRANSDUCER
B (469)
G/B (259)
V/W (415)
YE114 (M.W.H)
LOCATION E3 EARTH CONNECTOR
B/G (151)
B/R (157)
B/O(154)
B (150)
B/Y (155)
B/W (152)
YE117 (POWER TRAIN HARNESS)
DIAGNOSTIC INTERCONNECT
W/B (451)
YE118 (BATTERY HARNESS)
ENGINE COOLING FAN HARNESS
Y (208)
O(204)
YE119 (ENGINE COOLING FAN HARNESS)
ENGINE COOLING FAN
B (633)
R (204) OR (208)
Y (250)
G (204) OR (208)
YE120 (POWER TRAIN HARNESS)
A/C COMPRESSOR SUPPRESSION DIODE
G (59)
B/R (750)
YB30 (M.W.H)
AUTO TRANS SELECTOR HARNESS
BLU (774)
B/G (151)
GY (8)
BR/W (19)
R/W (1429)
YB34 (AUTO TRANS SELECTOR HARN)
POWER & ECONOMY SHIFT SWITCH
GY (8)
BR/W (19)
BLU (774)
B/G (151)
YB35 (POWER TRAIN HARNESS)
NEUTRAL START & BACK UP SWITCH
BR/BLU (42)
B/R (750)
GY (434)
GY/BLU (1434)
LG (24)
YB38 (M.W.H)
BODY HARNESS CONNECTOR
V (120)
V/R (192)
BLU/B (115)
T (201)
G (117)
Y/BLU (116)
BLU (15)
LG (200)
LBLU (14)
BLU/O (46)
BLU/R(20)
O/B (540)
BR (9)
O/Y (1240)
LG(24)
YB44 (M.W.H)
IGNITION SWITCH
BR (4)
V (5)
R (2)
P (3)
YB66 (M.W.H)
INSTRUMENTS
B/Y (155)
GY (8)
BLU/Y (16)
BR/W (19)
LBLU (14)
V/R (234)
G (875)
W (85)
BLU (15)
O/Y (1340)
Y/R (88)
P/BLU (44)
G/W (1220)
BR/R (121)
BLU/B (946)
V/W (123)
BR (25)
T (30)
BR/O (33)
YB74 (M.W.H)
BODY HARNESS CONNECTOR
T (30)
BR/B (199)
W/G (174)
BR/W (19)
O/B (1140)
BR/G (41)
GY (118)
Y (885)
BR/O (33)
V (884)
P (139)
BLU (883)
LBLU (411)
B(882)
O/BLU (47)
B/Y (155)
YB175 (M.W.H)
B.C.M CONNECTOR 3
LBLU (161)
W/BLU (494)
Y/R (143)
Y (43)
O/BLU (840)
P/B (39)
B (1150)
BLU/W (97)
GY (83)
LBLU (94)
O/W (840)
Y/B (265)
B/R (1146)
W (160)
GY/B (96)
B/LG (556)
G/W (1220)
R/B (1221)
V/R (229)
B/G (271)
Y (266)
G/W (1220)
Y/B (272)
W (717)
W/R(308)
R/W (261)
BERLINA & CALAIS
YB87 (M.W.H)
(ECC) CONNECTOR
P/BLU (44)
Y/B (52)
G/W (1220)
LG/B (735)
BLU/B (734)
GY (8)
B (155)
B/R (292)
Y (51)
B/R (64)
BR/W (19)
EXECUTIVE
YB128 (M.W.H)
DATA LINK CONNECTOR
BLU/B (863)
R/B (1221)
O/B (740)
W/B
B (150)
B/Y (155)
G/W (1220)
YB129 (POWER TRAIN HARNESS)
TRANSMISSION CONNECTOR
R (1228)
GY/BLU (1229)
Y/B (1223)
LG (1222)
P/BLU (339)
B/Y (1227)
B (469)
G/W (897)
Y (1225)
GY (1226)
BR/Y (1224)
GY/R (422)
BR (418)
YB132 (POWER TRAIN HARNESS)
MANUAL TRANS SPEED SENDER
T (832)
BLU/W (831)
YB163 (M.W.H)
B.C.M CONNECTOR 2
BLU (15)
G/Y (359)
O/R (140)
G/W (674)
G (401)
Y/B (260)
LBLU (14)
O/B (473)
B/G (151)
R/BR (962)
O/V (440)
Y (196)
EXECUTIVE
YB164 (M.W.H)
B.C.M CONNECTOR 3
GY/R (1393)
GY (8)
P/B (39)
GY (83)
G/W (1220)
R/W(246)
R/B (1221)
BLU/W (97)
Y (266)
O (291)
BR/G (271)
BLU/W (494)
V/R (229)
LBLU (94)
B/G (151)
G/W (1220)
B/R (1146)
B (1150)
EXECUTIVE
YB174 (M.W.H)
B.C.M CONNECTOR 2
LBLU (14)
V (782)
O/B (740)
Y (173)
BR (90)
BLU (15)
O/B (473)
O/V (440)
Y (196)
B/G (151)
BERLINA & CALAIS
YB188 (POWER TRAIN HARNESS)
P.C.M 2 CONNECTOR
V/W (415)
O/B(740)
B/Y (1227)
Y (410)
BR (472)
LG (1464)
G/B (259)
BLU (417)
B/R (750)
R(481)
A12
B/R (750)
B/R (750)
B/R (750)
O/B (740)
G/W (465)
R/B (1221)
GY (416)
P/B (39)
YE98 (M.W.H)
A.B.S & T.C.S MODULATOR AND CONTROL MODULE
BLU (883)
B (882)
R (873)
W (872)
GY (833)
BR (830)
Y (885)
V (884)
G/W (1220)
BLU/B (863)
O/W (1426)
BLU/R (20)
R (855)
B/O (154)
R (23)
R (23)
B (150)
V/R (88)
G (875)
B/W (1427)
R/BR (121)
R/W (1429)
NOTE:- CONVENTIONAL CURRENT FLOW IS ASSUMED IE. FLOWING FROM BATTERY +VE TO BATTERY -VE
YB193 (POWER TRAIN HARNESS)
P.C.M CONNECTOR 1
B/R (453)
W (423)
T (832)
V (430)
LBLU/B (647)
GY (1412)
T/B (424)
GY/B (1413)
B (630)
V (412)
V/B (413)
BR/W (792)
BR (418)
GY/R (422)
BR (418)
LG (1222)
G/W (897)
Y/B (1223)
G/W (897)
LG/B (444)
LBLU (441)
Y/G (428)
W/R (815)
V/W (123)
LG/W (443)
LBLU/B (442)
O/W (1426)
BLU/W
YB194 (POWER TRAIN HARNESS)
P.C.M CONNECTOR 3
BR/Y (1224)
B/W (1427)
Y (1225)
GY/BLU (1434)
GY (1226)
R/W (806)
BLU/W (304)
LG/B (366)
BLU (774)
Y (846)
W/B (451)
BLU (841)
B (469)
BR/Y (844)
B/Y (452)
B/P (429)
R (1228)
V (843)
GY/BLU (1229)
G (842)
P (439)
BLU (31)
GY (845)
V (435)
LBLU (411) S/C ONLY
YB195 (POWER TRAIN HARNESS)
AUTO TRANSMISSION SPEED SENDER
BLU/W(831)
T (832)
YR32 (BODY HARNESS)
FUEL TANK HARNESS CONNECTER
V (120)
BR (30)
B/BLU (156)
B/Y (155)
YR44 (FUEL TANK HARNESS)
FUEL TANK
B/BLU (156)
BR (30)
B/Y(155)
V (120)
YR45 (BODY HARNESS)
FUEL PUMP INTERCONNECT (WHERE FITTED)
B/BLU (156)
V (120)
B/W (489)
V/W (1120)
LBLU (411)
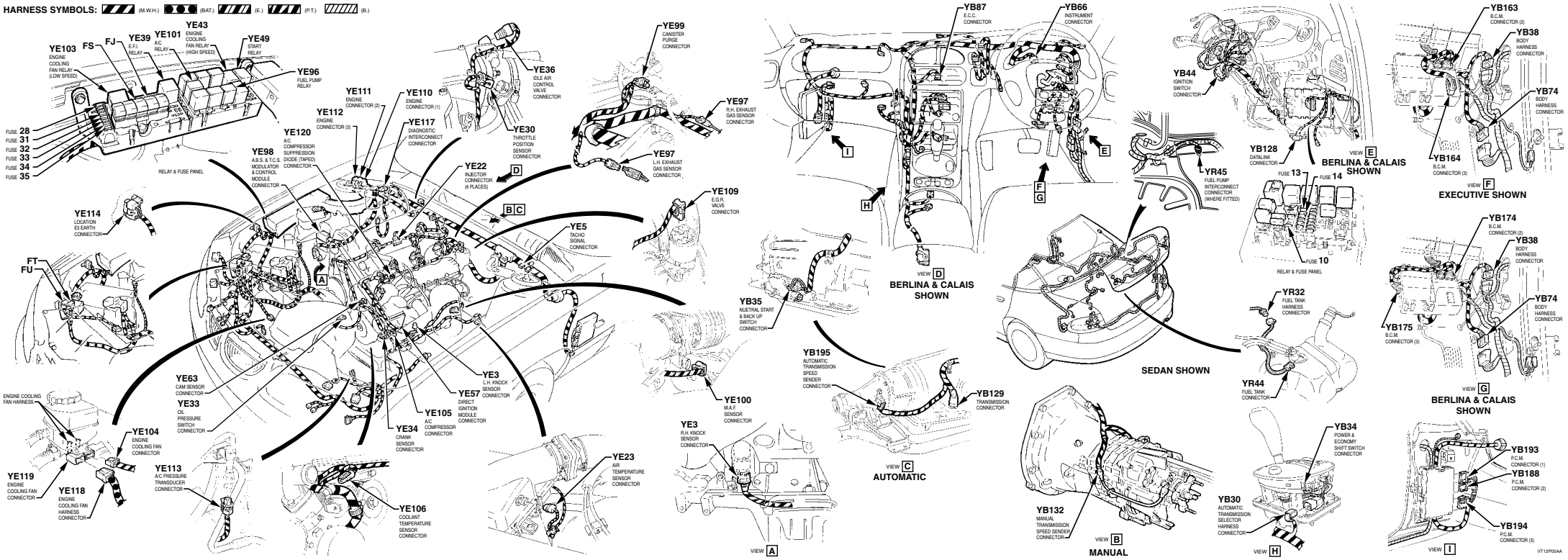
WIRING DIAGRAMS